TW-60 PUBLIC SAFETY RADIO INTERFACE

INSTRUCTION MANUAL

TW-60 Public Safety Radio Interface Manual
© 2005 Vitec Group Communications
All Rights Reserved

Part Number 810320 Rev. 1

Vitec Group Communications, Inc.
4065 Hollis Street
Emeryville, CA 94608-3505
U.S.A

Clear-Com is a registered trademark of Vitec Group Communications
The Clear-Com **Logo** is a registered trademark of Vitec Group Communications
Eclipse is a registered trademark of Vitec Group Communications
Windows is a registered trademark of Microsoft Corp.

CONTENTS

IMPORTANT SAFETY INSTRUCTIONS i

OPERATING A TW-60 1-1
Introduction 1-1
Description 1-1
Front Panel Controls and Indicators 1-1
Rear Panel Controls and Indicators 1-2

INSTALLING A TW-60 2-1
Connection to Radios 2-1
Wiring the Two-Way Radio Cable 2-2
Setup Switches 2-2
Rack Mounting 2-3
Connecting the TW-60 2-3
Verifying Operation of the TW-60 System 2-5

TECHNICAL REFERENCE 3-1
Block Diagram 3-1

SPECIFICATIONS 4-1

WARRANTY 5-1
Warranty Repairs 5-2
Non-Warranty Repairs 5-2

IMPORTANT SAFETY INSTRUCTIONS

Please read and follow these important safety instructions.

1. Read these instructions.
2. Keep these instructions.
3. Heed all warnings.
4. Follow all instructions.
5. Do not use this apparatus near water.
6. Clean only with dry cloth.
7. Do not block any ventilation openings. Install in accordance with the manufacturer's instructions.

This symbol alerts you to the presence of uninsulated dangerous voltage within the product's enclosure that might be of sufficient magnitude to constitute a risk of electric shock. Do not open the product's case.

This symbol informs you that important operating and maintenance instructions are included in the literature accompanying this product.

Figure 1: Safety Symbols

8. Do not install near any heat sources such as radiators, heat registers, stoves, or other apparatus (including amplifiers) that produce heat.
9. Do not defeat the safety purpose of the grounding-type plug. A grounding type plug has two blades and a third grounding prong. The third prong is provided for your safety. If the provided plug does not fit into your outlet, consult an electrician for replacement of the obsolete outlet.
10. Protect the power cord from being walked on or pinched, particularly at plugs, convenience receptacles, and the point where they exit from the apparatus.
11. Only use attachments/accessories specified by the manufacturer.
12. Unplug this apparatus during lightning storms or when unused for long periods of time.
13. Refer all servicing to qualified service personnel. Servicing is required when the apparatus has been damaged in any way, such as if the power-supply cord or plug is damaged, liquid had been spilled or objects have fallen into the

apparatus, the apparatus has been exposed to rain or moisture, does not operate normally, or has been dropped.

14. Do not expose the apparatus to dripping or splashing and do not place objects filled with liquids, such as vases, on the apparatus.

WARNING: To reduce the risk of electric shock, do not expose this apparatus to rain or moisture.

15. The appliance coupler is considered the disconnection device and should remain readily operable for disconnection of unit.

OPERATING A TW-60

INTRODUCTION

Thank you for choosing this Clear-Com product.

"Radio interoperability" allows public safety providers to talk in real time on-demand regardless of the brand, model number, or frequencies of the radio equipment used.

"Radio interoperability" is the ability of public safety providers – law enforcement, firefighters, EMS, emergency management, public utilities, transportation and other personnel – to exchange voice communications on demand, in real time. It is the term that describes how radio communications systems should operate between and among agencies and jurisdictions that respond to common emergencies. Communication should be achieved regardless of the brands, model numbers, or frequency ranges of the radio equipment used.

The TW-60, in conjunction with an associated Clear-Com matrix communications system, can be installed with an existing Land Mobile Radio communications system to provide interoperability.

Please read this manual completely to better understand the functions of the TW-60. This manual is to be used in conjunction with the manuals supplied for the associated Clear-Com matrix communications system. For questions not addressed in this manual, contact your dealer, distributor, or Clear-Com directly. Our applications support and service people are ready to help.

DESCRIPTION

The TW-60 Public Safety Radio Interface provides the physical interface point to connect a Land Mobile Radio to a Clear-Com matrix communications system. It provides the necessary control and voice connections, including the ability to delay the retransmission of voice to allow for the key up time on the retransmitting radio. Each 1RU TW-60 provides and powers four separate radio interface channels.

FRONT PANEL CONTROLS AND INDICATORS

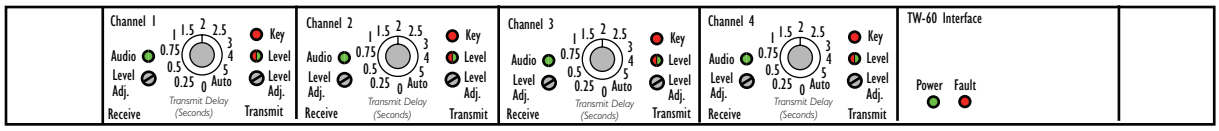

Figure 1: Front Panel of TW-60 Interface

• **Receive Level Adjust:** Used to adjust the receive level of the base station two-way radio when there is no external volume control on the base station radio.

Note: The receive level is set at the factory and should be adjusted only if the remote radio does not have its own volume adjustment. The default is 12 o'clock, (1/2 rotation).

• **Transmit Level Adjust:** Use the TRANSMIT LEVEL ADJUST volume control to set the level of the intercom's audio as heard at the remote station radio. The factory default is 12 o'clock, (1/2 rotation).

• **Transmit Delay:** This rotary switch enables and adjusts the key up delay available for each two-way radio. The available settings are shown in Table 1.

• **Audio LED:** This green LED illuminates when the system has sensed audio from another channel and is supplying audio to this channel to be retransmitted.

• **Key LED:** This red LED illuminates when this channel is keying its associated transmitter.

• **Level LED:** This bi-color red/green LED indicates audio levels received into the system. Use this indicator to adjust the volume control on the two way radio to match the system levels. The LED turns red when the signal is too high. Note that proper audio levels cause the LED to light green when speaking, but flash red about 10 percent of the time.

• **Power LED:** This green LED illuminates when the system is receiving AC power and is turned on.

• **Fault LED:** This red LED illuminates when the system is receiving AC power and is turned on, but it has detected a problem with one of its internal power supplies. The TW-60 may still operate in this condition, but service is required to correct this condition.

REAR PANEL CONTROLS AND INDICATORS

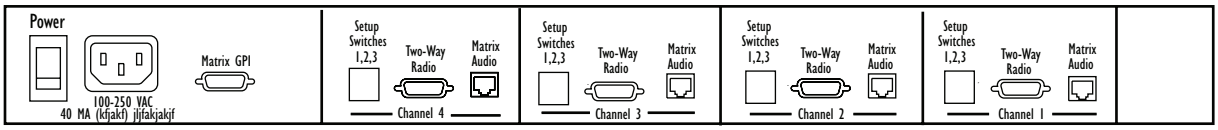

Figure 2: Back Panel of TW-60 Interface

• **Power Switch:** This switch turns the TW-60 on or off.

• **IEC Power Inlet Connector:** The AC power cord connects to this receptacle.

• **Matrix GPI Connector:** DB-9M connector used to connect control and audio signals to the Clear-Com matrx.

• **Channel 1 - 4 Radio Connectors:** These four DB-9F connectors are used to connect control and audio signals to the base station two-way radios on each channel.

• **Channel 1 - 4 Matrix Audio Connectors:** These four RJ-45 connectors are used to connect the 4-wire audio signals to the Matrix port.

• **Channel 1 - 4 Setup Switches:** These 3 dipswitches on each channel control the audio level interface and transmitter keying protocol for each two-way radio. Refer to Table 3.

TRANSMIT DELAY

For each of the four interface channels, a knob is provided on the front panel to set the amount of time that audio will be delayed before it is transmitted. The Transmit Delay is adjustable as follows:

POSITION	ACTION
0	Delay is off, speech transmits immediatley
0.25	Delay is 0.25 seconds
0.5	Delay is 0.5 seconds
0.75	Delay is 0.75 seconds
1	Delay is 1 second
1.5	Delay is 1.5 seconds
2	Delay is 2 seconds
2.5	Delay is 2.5 seconds
3	Delay is 3 seconds
4	Delay is 4 seconds
5	Delay is 5 seconds
Auto	Delay is adjusted automatically

Table 1: Transmit Delay Switch Positions

In many trunking radio systems, the delay from keying a transmitter to having a voice channel ready for use may be variable. The Automatic Transmit Delay setting is useful in this situation to provide the minimum delay necessary for a complete voice transmission. When set to automatically delay the transmitted voice, the TW-60 listens for the tones the two way radio is producing and delays the transmission of the voice until the tones stop.

2 INSTALLING A TW-60

There are eight basic steps to installing the TW-60 Public Safety Radio Interface:

1. Wire cables for connecting the TW-60 unit to radios.
2. Install the TW-60 unit in an equipment rack.
3. Connect the the TW-60 unit to power,
4. Connect the TW-60 unit to radios.
5. Connect the TW-60 unit to a Clear-Com matrix,
6. Connect the TW-60 unit to general-purpose outputs (GPIs).
7. Adjust tranmsit levels.
8. Verify operation of the system.

You can wire the TW-60 to a wide variety of two-way radio audio and control connections.

CONNECTION TO RADIOS

In order to accommodate the widest variety of 2-way radios, each interface channel of the TW 60 has a 9-pin DB-9F connector which can be wired to a wide variety of two-way radio audio and control connections. Wiring diagrams for many two-way radios are supplied as examples of cable wiring. (See addendum sheet) This will allow you to make a cable that will operate with your particular radio(s). Each connector socket is labeled on the TW-60's back panel as Two-Way Radio.

PIN	FUNCTION
1	Earphone receive audio ground (shield)
2	Normally closed (NC) transmit key contact
3	Common (C) transmit key contact
4	Normally open (NO) transmit key contact
5	Microphone transmit audio ground (shield)
6	Earphone receive audio
7	Common (C) transmit key contact
8	Alternate transmit key / audio connection
9	Microphone transmit audio

Table 2: Two-Way Radio DB-9F Connections

The combination of setup switches, connector wiring and front panel "Transmit" and "Receive" level controls assures correct level matching to virtually any radio. A relay provides the required "Push-to-Talk" transmitter "keying" of the radio. This relay is activated when the Clear-Com matrix communications system

commands it. The relay contacts, in conjunction with the cable wiring chosen, allow for correct transmitter keying to virtually any type of radio.

In addition to the following table, refer to the Block Diagram section of this manual for a simplified diagram showing the Two-Way Radio connections to the DB-9F connectors.

WIRING THE TWO-WAY RADIO CABLE

To connect the base-station radio to the TW-60, you must build your own custom connector cable. This involves several steps:

1. Obtain or make a cable using the kind of plug that fits your radio. Use single conductor shielded wire for each cable. Miniature type stereo cable is a good choice. Solder these cables to the DB-9 connector as shown in Example 1. This cable length should be kept less than 5 feet. A good source of molded connectors for your radio would be an external microphone or earphone which can be purchased from your radio supplier. You will need to cut off the microphone or earphone as it will not be needed.

2. The next step will be to set the type and level of microphone. The TW-60 has three Setup Switches for each interface channel that can be set for specific types of microphones. The three illustrations that follow show how the TW-60 switches and the male DB-9 connector on the channel cable are configured for most radios. The section that follows, "Setup Switches," gives instructions for setting the TW-60's Setup Switches.

3. The most difficult setting is often getting your particular radio to key properly. Every radio has a different method of externally keying its transmitter. To determine how to set the jumpers and wire the connector, you need to know what type of external microphone is used in your radio, or you need to experiment. Below are three examples of how to key the transmitter. If you are unsure of which wiring to use, try all three, one at a time. Pins 2, 3, 4 and 7 are the relay contacts in the TW-60. If your radio model is not listed in the addendum sheet and you have tried all three examples, but you still can't make the two-way radio work properly, call customer service and we will help you get the system working.

SETUP SWITCHES

Table 3 shows the location of the Setup Switches on the back panel. There is one set of three for each of the four channels. The switches are set to ON when they are in the down position and are set to OFF when they are in the up position.

Output Level Switches: Set switches 2 or 3 to ON to lower the signal level to the two way radio's microphone input. The switches change the levels, as shown in Table 3. In general, set switch 3 to ON for most low-level mics (for example, electrets): set both switches 2 and 3 ON to further reduce the input level for dynamic type mics.

Transmit Key Switch: For some two-way radios, a dedicated power path may be needed to activate the Transmit function. If so, set switch 1 to ON, as shown in Table 3.

SWITCH 1	SWITCH 2	SWITCH 3	FUNCTION
	Off	Off	Mic input range is + 11 dBv to - 20 dBv
	Off	On	Mic input range is - 26 dBv to - 48 dBv
	On	On	Mic input range is - 30 dBv to - 57 dBv
On			Provides a dedicated power path to key Transmit
Off			Removes power path

Table 3: Setup Switch Positions

RACK MOUNTING

The unit requires 1.75 inches (44 mm) (1RU) of rack space. It requires no additional free rack space above or below it for ventilation. The station is 5.25 inches (133 mm) in depth and requires at least 2 1/2 inches clearance in the rear for connectors and cables. The single-piece front panel has integral "rack ears". This adds stability and strength. Take care not to over tighten the rack mounting screws as this can mar the front panel.

CONNECTING THE TW-60

Make the necessary back panel connections to the TW-60:

1. Plug the power cord into the IEC receptacle of the TW-60 and connect the power cord to an unswitched AC outlet.
2. Connect the two-way radio cables from the DB-9F connectors on the TW-60 to each two-way radio.
3. Using 730239 cables, connect the Channels 1 through 4 Matrix Audio Connectors of the TW-60 to the appropriate connectors on the Clear-Com matrix. As can be seen in Table 4, four of these cables are needed for each TW-60 unit.
4. Using a 730240 or a 730241 cable, connect the GPI cable from the DB-9M connector on the TW-60 to the DB-25F GPI connector on the Clear-Com matrix. Use the cable shown in Table 4 for each TW-60 unit. Each cable serves two units.

TW-60 UNITS	730239 CABLES	730240 CABLES	730241 CABLES
Channels 1 - 4	4	1	
Channels 5 - 8	4		
Channels 9 - 12	4		1
Channels 13 - 16	4		

Table 4: Matrix Cables Required for Each TW-60 Unit

The matrix audio RJ-45 jack pinout from the TW-60 to the Clear-Com matrix communications system is as follows:

PIN	FUNCTION
1	Not used
2	Not used
3	Audio to matrix +
4	Audio from matrix +
5	Audio from matrix -
6	Audio to matrix -
7	Not used
8	Not used

Table 5: Matrix Audio RJ-45 Jack Pinout

The Matrix GPI DB-9M jack pinout from the TW-60 to the Clear-Com matrix communications system is as follows:

PIN	FUNCTION
1	Channel 1 matrix GPI control
2	Channel 2 matrix GPI control
3	Channel 3 matrix GPI control
4	Channel 4 matrix GPI control
5	Signal return
6	Chassis ground
7	Chassis ground
8	Chassis ground
9	Chassis ground

Table 6: Matrix GPI DB-9M Jack Pinout

VERIFYING OPERATION OF THE TW-60 SYSTEM

After the interconnections have been made, and programmed with the Clear-Com matrix communications system as described in its manuals, it is now time to check that everything is working properly:

1. Using the documentation supplied with the Clear-Com matrix communications system as a guide, place all of the radio interfaces into one group.
2. Turn on the base station two-way radio and the remote radio. Make sure you have fresh or fully charged batteries. With the external jacks on the base station removed, make sure the radios can communicate with each other.
3. Set all the Receive Level and Transmit Level controls on the TW-60 to their mid position. Set the Transmit Delay Switch for each channel to 0.
4. Turn on the TW-60 using the power switch on the back panel. The green power indicator on the front panel should light and the red fault indicator should be off.
5. Set the base station two-way radio volume control to approximately zero volume. Key the remote radio associated with the base station radio. Gradually increase the volume control on the base station two-way radio until the green Audio light on the channel associated with that radio lights. The volume control should be set to the minimum level that will light the green Audio light with the sound of the radio unsquelching.
6. Repeat the previous step for each radio on the other channels.
7. When the volume controls have been correctly adjusted, keying any remote radio should result in the Audio LED lighting on the associated TW-60 channel and also in the Transmit Key LEDs lighting on the other TW-60

channels. The transmit indicator on the base station radios (if any) on these channels should also illuminate.

8. Now verify that when any remote radio is keyed, the others can all hear the transmission. To avoid feedback, it is helpful to have the remote radios some distance away or in another room. The Transmit Level controls on the TW 40 adjust the volume to the remote radios. If the audio heard on any remote radio is too loud or too weak, adjust the Transmit Level control for that radio on its associated TW-60 channel. While speaking on the remote radio, the Transmit Level LED on the other channels should be flashing green with some occasional red. You may need to adjust the Setup Switches on the transmitting channel to set the audio signal to the level needed by the mic circuit of that radio. Adjust switches 2 and 3 as described in Table 3.
9. You should now be able to communicate from any remote radio to the other remote radios. Pressing the talk key on each remote transmitter should key any other base station transmitter channels in the same group. Note whether the key up time of any given channel prevents the first words from being received. If the first words are missed on any channel(s), turn the Transmit Delay Switch for that channel to add more audio delay. Adjust for the minimum delay that consistently transmits the first words promptly and correctly. For trunking radio systems which have an inconsistent delay that varies depending upon conditions, set the Transmit Delay Switch to Auto.
10. If there are other TW-60 units in the system, program each one using the above steps. When all have been programmed, verify that any radio channel on any TW-60 can be retransmitted onto all of the other channels on all of the TW-60 units.

3 TECHNICAL REFERENCE

BLOCK DIAGRAM

The following block diagram shows only two of the four channels.

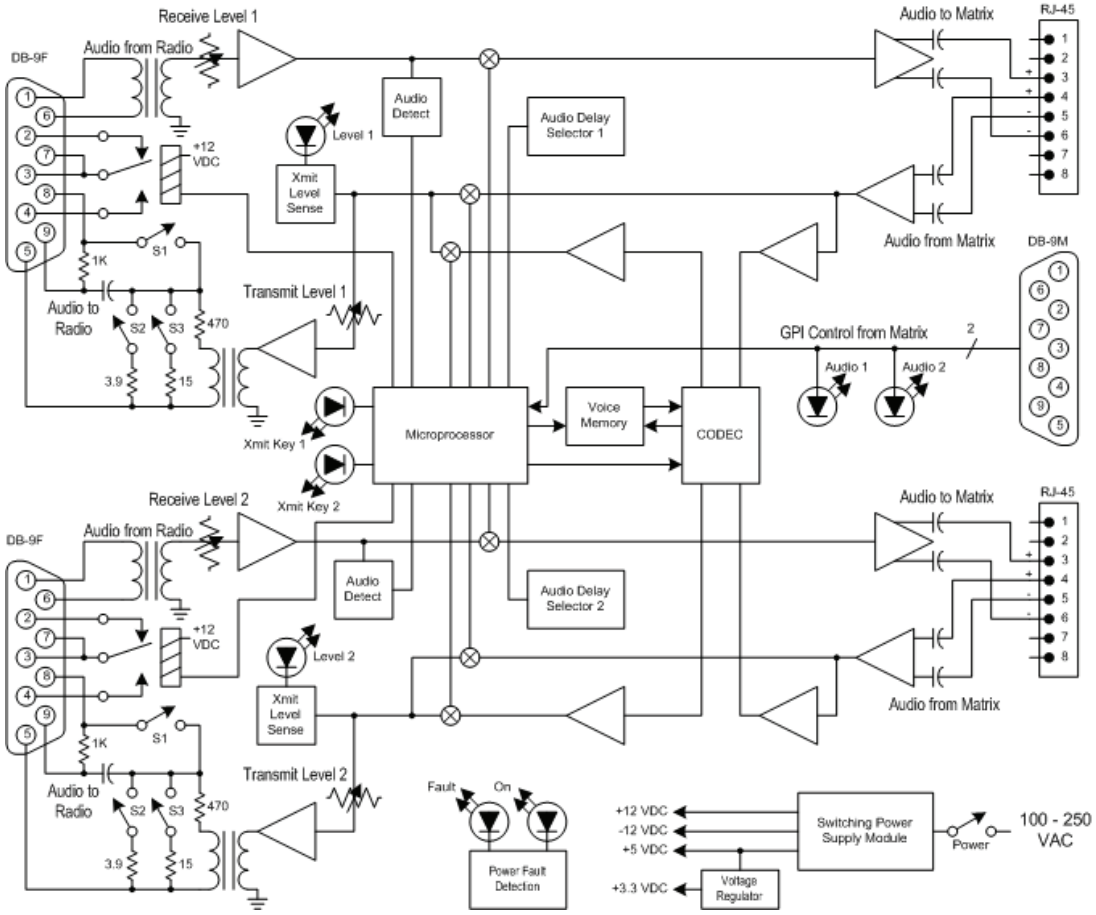

Figure 1: Block diagram of two channels

4 SPECIFICATIONS

Transmit Output

To radio microphone	Transformer isolated
Microphone Type	Carbon, dynamic or electret Level: -57 dBv to +11 dBv *
Frequency Response	100 - 15,000 Hz, ±3 dB
Transmit Key	N.O. or N. C. dry contacts
Transmit Audio Delay	0 to 5 seconds in 12 steps

Receive Input

From radio earphone:	Transformer isolated
Impedance:	400 ohms balanced. Level: -8 dBv to +23 dBv *
Frequency Response	100 - 15,000 Hz, ±3 dB

Rear Panel Connectors

Two-Way Radios	(4) DB-9F (1 per channel)
Matrix Audio	(4) RJ-45 (1 per channel)
Matrix GPI Control	(1) DB-9M
AC Power	(1) IEC 320 connector

Rear Panel Controls

Power Switch	(1) Rocker switch

Front Panel Controls

Receive Level Adjust	(4) Trimpots (1 per channel)
Transmit Level Adjust	(4) Trimpots (1 per channel)
Transmit Delay	(4) 12-position rotary switch (1 per channel)

Front Panel Indicators

Receive Audio	(4) Green LEDs (1 per channel)
Transmit Key	(4) Red LEDs (1 per channel)
Transmit Audio Level	(4) Red/Green LEDs (1 per channel)
Power On	(1) Green LED
Power Fault	(1) Red LED

Power Requirements

100-250 VAC, 50 - 60 Hz, 70 W (max)

Environmental

32 - 122° F (0 - 50° C)

Dimensions
19 inches W x 1.75 inches H x 5.25 inches D (483 mm x 44 mm x 133 mm)

Weight
4.5 lbs. (2.05 kg)

* 0 dBv is referenced to 0.775 volts RMS.

Notice About Specifications

While VGC Clear-Com makes every attempt to maintain the accuracy of the information contained in its product manuals, that information is subject to change without notice. Performance specifications included in this manual are design-center specifications and are included for customer guidance and to facilitate system installation. Actual operating performance may vary.

5 WARRANTY

Clear-Com guarantees this product to be free of manufacturing defects in material and workmanship under normal use for a period of two years from the date of purchase.

TECHNICAL SUPPORT

Clear-Com offers 24/7 customer support.

Return authorization numbers are required for all returns.

Both warranty and non-warranty repairs are available.

To ensure complete and timely support to its customers, Clear-Com maintains Technical Service Centers (TSC) staffed by qualified technical personnel. A Technical Service Center is staffed to respond to all technical inquiries and to troubleshoot technical problems regarding all products supplied by Clear-Com. A TSC is fully available to Clear-Com's customers *during the full course of their warranty period*.

Instructions for reaching our Technical Service Centers are given below.

For technical support from Europe, the Middle East, and Africa

Call: +49 40 66 88 40 40 Monday through Friday 09:00 – 17:00 (GMT)

+49 40 66 88 40 41 24hrs, any day (But you must have your PIN number ready.)

Web site: www.clearcom.com

For technical support from the Americas and Asia

Call: +1 510 496 6666

Web site: www.clearcom.com

FAX: +1 510 496 6610

EXCEPTIONS

This warranty does not include damage to a product resulting from cause other than part defect and malfunction. The Clear-Com warranty does not cover any defect, malfunction, or failure caused beyond the control of Clear-Com, including unreasonable or negligent operation, abuse, accident, failure to follow instructions in the manual, defective or improperly associated equipment, attempts at modification and repair not approved by VGC, and shipping damage. Products with their serial numbers removed or defaced are not covered by this warranty.

WARRANTY REPAIRS

While Clear-Com will ensure complete system integrity by providing whatever support is necessary to resolve any failure covered under the terms of the warranty, the normal procedure will be to repair or replace any defective Line

Replaceable Unit (LRU) that is returned to Clear-Com during the warranty period.

A Line Replaceable Unit (LRU) is defined as: an assembly that can be safely removed from the system and readily replaced by plugging in a new unit. In the case of ancillary items such as power supplies, the entire power supply would be returned. Whereas, in the case of circuit cards, control panels, etc., only these assemblies would be returned for repair. All equipment provided by Clear-Com is covered under the warranty.

This warranty does not include defects arising from installation (when not performed by Clear-Com), lightning, power outages and fluctuations, air conditioning failure, improper integration with non-approved components, defects or failures of customer furnished components resulting in damage to Clear-Com provided product.

NON-WARRANTY REPAIRS

Equipment that is not under warranty must be sent prepaid to Clear-Com. If requested, an estimate of repair costs will be issued prior to service. Once repair is approved and completed, the equipment will be shipped freight collect from the TSC.

REPLACEMENT UNITS

Should Clear-Com determine, in its reasonable discretion, that any part of a product is defective due to faulty materials or workmanship, Clear-Com shall at its expense, repair or replace such part and return the repaired/replacement part to the customer. The provisions of this warranty shall apply to the repaired/replacement part for the unexpired portion, if any, of the warranty period.

EMERGENCY ON-SITE ASSISTANCE

Clear-Com can provide emergency on-site technical assistance in support of warranty activities. The level of support effort required will be decided on a case-by-case basis. Clear-Com has the qualified technical staff to support any and all emergency site activities should they occur.

LIABILITY

The foregoing warranty is Clear-Com's sole and exclusive warranty. There are no other warranties (including without limitation warranties for consumables and other supplies), or guarantees, expressed or implied (including, without limitation, any warranties of merchantability or fitness for a particular purpose), of any nature whatsoever, whether arising in contract, tort, negligence of any degree, strict liability or otherwise, with respect to the products or any part thereof delivered hereunder and/or with respect to any non-conformance or defect in any such product and/or part thereof delivered hereunder and/or with respect to any non-conformance or defect in any such product and/or part

thereof delivered hereunder, or any other warranties or guarantees, including but not limited to any liability of Clear-Com for any consequential and/or incidental damages and/or losses (including loss of use, revenue, and/or profits). In any event, the maximum extent of Clear-Com's liability to customer hereunder shall not under any circumstances exceed the cost of repairing or replacing any part(s) found to be defective within the warranty period as aforesaid.

RETURNING EQUIPMENT FOR REPAIR

All equipment returned for repair must be accompanied by:

- Documentation stating the return address, telephone number, date of purchase, and a description of the problem.
- A repair reference number.

To obtain a repair reference number, contact the appropriate Technical Service Center at the phone numbers or Web sites listed below. Our representatives will give you instructions and addresses for returning your equipment. By talking with our representatives, many problems can be resolved on the phone.

For returns from Europe, the Middle East, and Africa

Call: +49 40 66 88 40 40 Monday through Friday 09:00 – 17:00 (GMT)

+49 40 66 88 40 41 anytime, any day

(But you must have your PIN number ready)

Web site: www.clearcom.com

For returns from the Americas and Asia

Call: +1 510 496 6666

Web site: www.clearcom.com

FAX: +1 510 496 6610